#12-359 Rebar Cutter/Bender

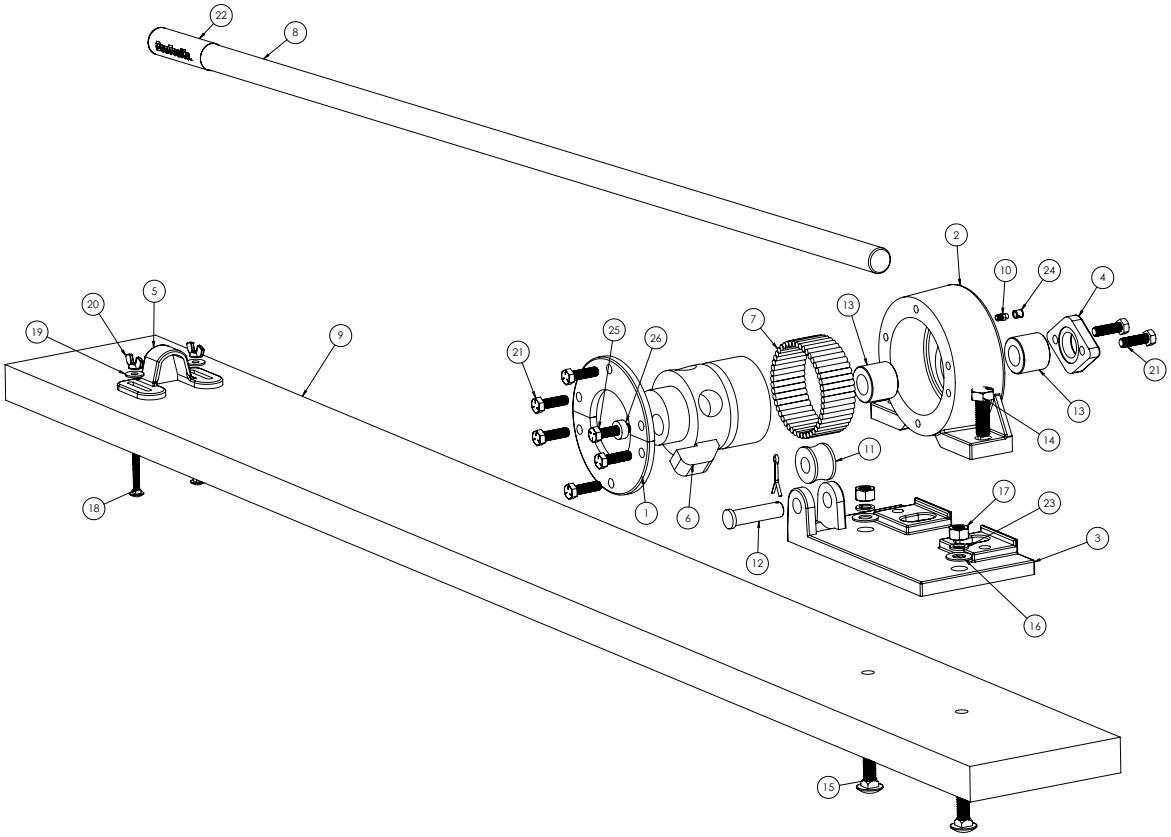

PARTS LIST

Ref #	Key #	Part #	Detail	Qty/Unit
12-359	1	50-352	Split Washers (Set of 2)	1
12-359	2	50-353	Housing w/ Grease Fitting	1
12-359	3	50-354	Base Casting	1
12-359	4	50-355	Back Plate	1
12-359	5	50-356	Handle Clip	1
12-359	6	50-357	Hub w/ Bushing	1
12-359	7	50-358	Beraring Set (48 pcs)	1
12-359	8	50-359	54" Steel Handle w/Grip	1
12-359	9	50-360	Mounting Board	1
12-359	10	52-661	Grease Fitting (not shown)	1
12-359	11	50-361	Roller Pin with Cotter Pin	1
12-359	12	50-362	Roller Pin w/Cotter	1
12-359	13	12-367	Cutter-Bushing Set (2 pcs)	2
12-359	14	52-479	Hex Head Bolt of Base	2
12-359	15	52-414	Carriage Bolt 1/2" x 2-1/2"	2
12-359	16	52-101	Flat Washer 1/2" on Base	2
12-359	17	52-199	Nut 1/2"	2
12-359	18	52-413	Carriage Bolt 1/4" x 2-1/4"	2
12-359	19	52-100	Flat Washer 1/4"	2
12-359	20	52-260	Wing Nut 1/4"	2
12-359	21	52-490	Hex Head Bolt 3/8-16 x 1-1/4"	7
12-359	22	51-113	Handle Grip	1
12-359	23	52-143	Lock Washer 1/2"	2
12-359	24	52-666	Grease Cap	1
12-359	25	52-422	Hex Head Bolt 3/8-16 x 1-1/2"	1
12-359	26	805-80375	Spacer	1

Order by Ref # and Key #
(or Part # if available)
Toll Free Order Hotline
800-444-7060